CATEGORY	DESCRIPTION	P/N #
CONNECTOR	RJ45 8P8C Connector H=4.1	MJ88B-BX11-HRVLX

REV.	ECN NO	DESCRIPTION	REVISED	DATE
A01	———	New Release	KELLY	2014.03.12

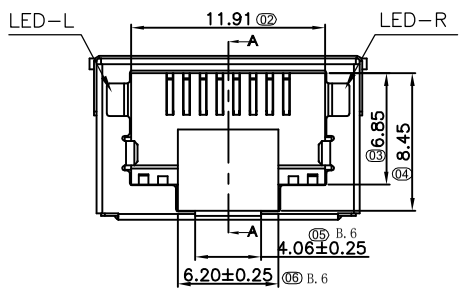

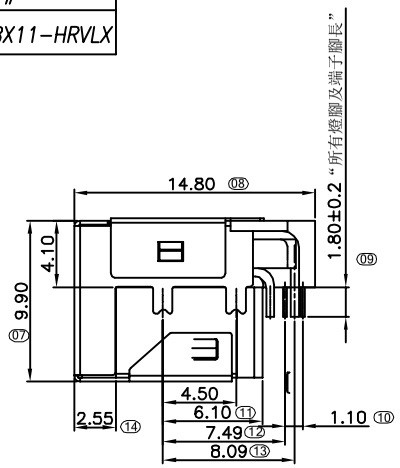

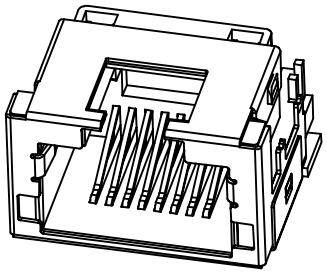

STANDARD:
1.COMPLIES WITH F.C.C STANDARDS OF PART 68.500

ELECTRICAL:
1. VOLTAGR RATIN : 125 VAC RMS .
2. CURRENT RATING : 1.5 AMP .
3. CONTACT RESISTANCE : 50 MILLIOHMS MAX.
4. INSULATION RESISTANCE : 500 MEGOHMS MIN @ 500 VDC.
5. DIELECTRIC STRENGTH : 500 VAC RMS 50Hz, 1MIN.

MATERIAL & FINISH:
HOUSING : LCP UL94V-0 ; BLACK
CONTACT : PHOSPHOR BRONZE, GOLD PLATING OVER NICKEL.
SHELL : SUS301 1/2H,T=0.25mm.

ENVIRONMENTAL:
1. STORAGE: -40°C TO +85°C.
2. OPERATION: -40°C TO +85°C.

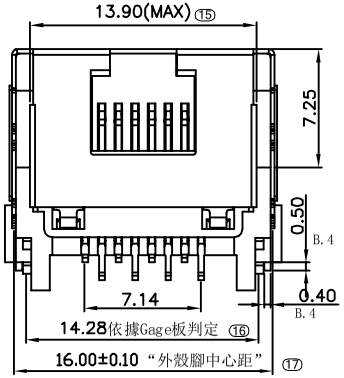

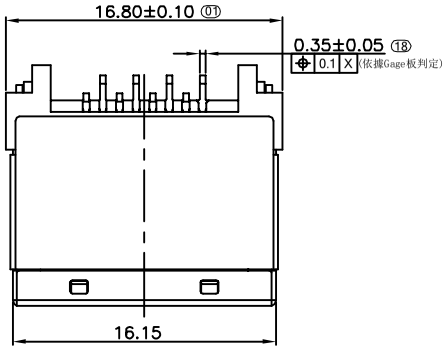

MJ88B-BX11-HRVLX

Material & Plating

Table 2

X	Terminal Plating
0	Au 1u" Plating
1	Au 3u" Plating
2	Au 6u" Plating
3	Au 15u" Plating
4	Au 30u" Plating
5	Au 50u" Plating

Table 2

X	LED-L	LED-R
1	GREEN	YELLOW
2	YELLOW	GREEN
3	WHITE	AMBER

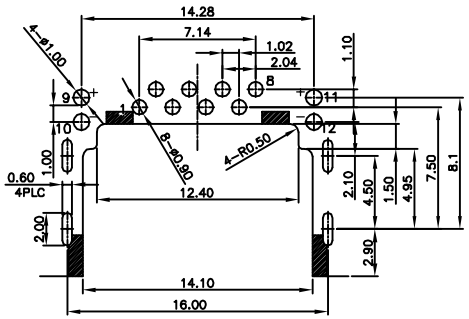

TOLERANCE: ±0.05.THICKNESS:1.2mm
RECOMMENDED PCB LAYOUT/TOP VIEW

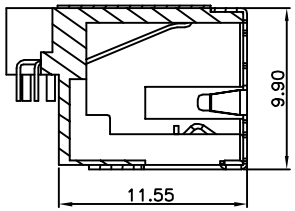

剖面圖A-A

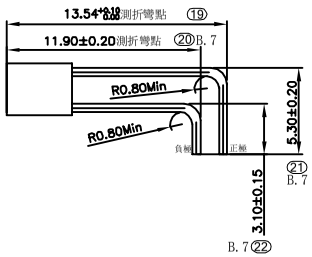

東莞市合陵電子有限公司
DongGuan HeLing Electronic Co.,LTD
Connector

UNLESS OTHERWISE SPECIFED TOLERANCES	SCALE:1/1	UNIT: mm	DWG.NO:
	SIZE: A3	PAGE:1 OF 1	REV:A01

DECIMALS:	ANGLES:	APPROVED BY	CHECKED BY	PREPARED BY
X :±0.5	X :±2°	TONY	BILL	KELLY
X.X :±0.3	X.X :±1°			
X.XX :±0.2		CUSTOMER COPY		